Schindler 3300
MRL Traction Elevator RCR Guide
California Hoistway Dimensions

We Elevate

Schindler


FIREFIGHTERS' OPERATION
CAR#1
8
7
7R
6
6R
5
5R
4
4R
3
3R
2
2R
1R

Schindler 3300 MRL/Optimized 3300 MRL
California Hoistway Dimensions

(control room sizes may be different for the Expanded 3300)

Standard Speeds: 100, 150 fpm (0.5, 0.75 m/s) 16 Openings max
Travel: Up to 98′-5″ (30.0 m)

For jurisdictions following ASME A17.1 code prior to 2009, please add 1 additional inch of overhead at 150 FPM.

Capacity 2100 – 3500 lbs, 13 – 21 passengers

Capacity lbs (kg)	Passengers max.	Speed fpm (m/s)	Number of stops max.	Available entrances max.	Car (Inside) A in (mm)	Car (Inside) B in (mm)	Car (Inside) C in (mm)	Door type	Door D in (mm)	Door E in (mm)	Shaft (Inside) Entrance type (x)	Shaft (Inside) F(vii) ft (mm)	Shaft (Inside) G ft (mm)	Shaft (Inside) H (viii) ft (mm)	Shaft (Inside) I (iii) (iv) ft (mm)	Travel height max. J (vi) ft (m) / FPM (m/s)
2100 (950)	13	10100/150 (.5/.75)	10	15	5′-9 5/16″ (1761)	4′-4 7/8″ (1343)	7′-9″ (2366)	2SSO	3′-0″ (915)	7′ (2134)	Front or Front/ rear	7′-8″(vii) (2235)	5′-9″ (1755)	5′-0″ (1524)	12′-7″ (3835)	98′-5″ (30.0) / 150 (.75) 59′ (18)/100 (.5)
												7′-8″(vii) (2235)	6′-5 5/8″ (1972)	5′-0″ (1524)	12′-7″ (3835)	
2500 (1135)	15	100/150 (.5/.75)	10	15	6′-9 5/16″ (2066)	4′-4 7/8″ (1343)	7′-9″ (2366)	2SSO/ SSCO	3′-6″ (1067)	7′ (2134)	Front or Front/ rear	8′-8″(vii) (2540)	5′-9″ (1755)	5′-0″ (1524)	12′-7″ (3835)	
												8′-8″(vii) (2540)	6′-5 5/8″ (1972)	5′-0″ (1524)	12′-7″ (3835)	
3000 (1360)	18	100/150 (.5/.75)	10	15	6′-9 5/16″ (2066)	4′-10 7/8″ (1495)	7′-9″ (2366)	2SSO/ SSCO	3′-6″ (1067)	7′ (2134)	Front or Front/ rear	8′-8″(vii) (2540)	6′-3″ (1905)	5′-0″ (1524)	12′-7″ (3835)	
												8′-8″(vii) (2540)	6′-11 5/8″ (2124)	5′-0″ (1524)	12′-7″ (3835)	
3500 (1590)	21	100/150 (.5/.75)	10	15	6′-9 5/16″ (2066)	5′-6 7/8″ (1699)	7′-9″ (2366)	2SSO/ SSCO	3′-6″ (1067)	7′ (2134)	Front or Front/ rear	8′-8″(vii) (2540)	6′-11 1/16″ (2110)	5′-0″ (1524)	12′-7″ (3835)	
												8′-8″(vii) (2540)	7′-7 5/8″ (2328)	5′-0″ (1524)	12′-7″ (3835)	

A Inside cab width
B Inside cab depth
C Inside cab height to underside of roof. [Inside cab height to finished ceiling is 7′-5 3/16″ (2265).]

2SSO 2-speed side opening (i)
SSCO Single speed center opening

D Door Width
E Door Height

F Shaft width
G Shaft depth
H Pit depth
I Overhead

Notes:
All dimensions are for information only and cannot be used for construction purposes without Schindler confirmation.
(i) 2SSO doors available with right or left opening.
(ii) Duplex operation available.
(iii) Clear overhead is defined from the lowest point below any obstruction such as: hoist beam(s), building beams, or roof structure to floor of top landing. For jurisdictions following ASME A17.1 code prior to 2009, please add 1 additional inch of overhead at 150 FPM.
(iv) Where permitted by code, no control room is required. A 3-phase disconnect must be located in both the hoistway overhead and a location in the building outside of the hoistway. 110v disconnect should be located outside of hoistway. Disconnects are not required to be an elevator-dedicated space. Please confirm with local requirements.
(v) Travel height max. varies depending on speed (FPM) and capacity (lbs).
(vi) Please contact your Schindler Sales Representative for additional hatch options such as diagonal entrances.
(vii) Shaft dimensions depend on if there are front or front/rear entrances.

Remote Control Room Details

This brochure provides guidance on the absolute minimum control room dimensions for some prevalent configurations. It does not include all options such as the latest CBC two way communications. Therefore these dimensions are not be used for designing or construction purposes. Project specific submittal drawings will provide the final dimensions. We strongly reccomend that the RCR be placed adjacent to the hoistway on the top landing whenever possible. Otherwise, the RCR can be located on any floor of your building, including the basement or roof. The wire run from the elevator machine to the RCR cannot exceed 140', and we reccomend leaving no less than 30 feet available for any re-routing or detours required by onsite conditions during installation. Please keep in mind that we must lay our wiring according to all applicable building and electrical codes, and measurements must be based on actual wire travel, not from point A to point B. We strongly reccomend that control rooms are placed adjacent to the hoistway on the top landing whenever possible to prevent building redesigns due to unforseen obstacles during installation.

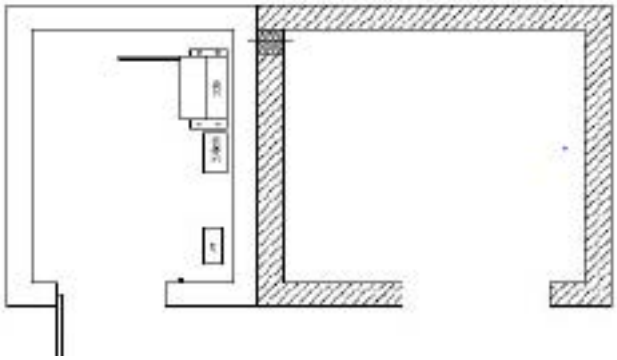

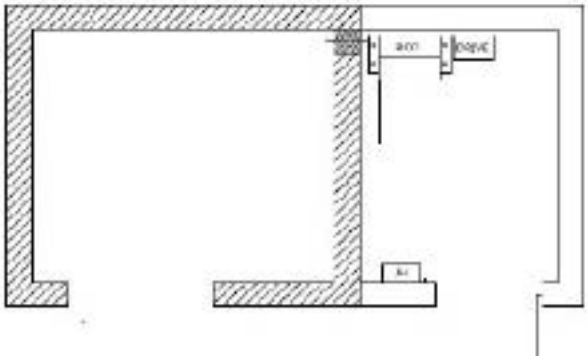

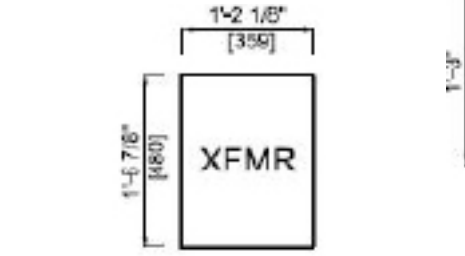

TRANSFORMER DIMENSIONS

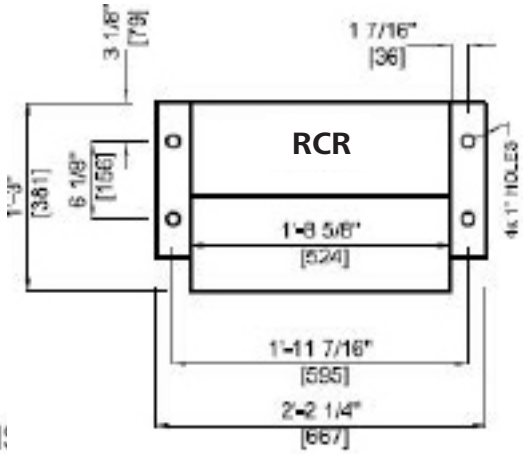

RCR DIMENSIONS

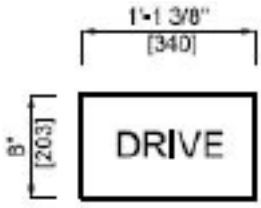

DRIVE DIMENSIONS

Note: the information provided are examples as room shape, door position, and other factors will influence the room size. Please consult your Schindler sales representative for more information.

Does my elevator need a transformer?

- If capacity 3,500 lbs. and below, at 150 fpm or less and 208 VAC or 480 VAC then no autotransformer required.
- If capacity is 3,500 lbs. or above at 200 fpm or greater and input power is 480 VAC, then no auto transformer is required.
- All other configuration require an autotransformer.
- RCR (remote control room) applications at 208 VAC and greater than 45 ft. wire run requires a "booster" autotransformer in the remote control room.

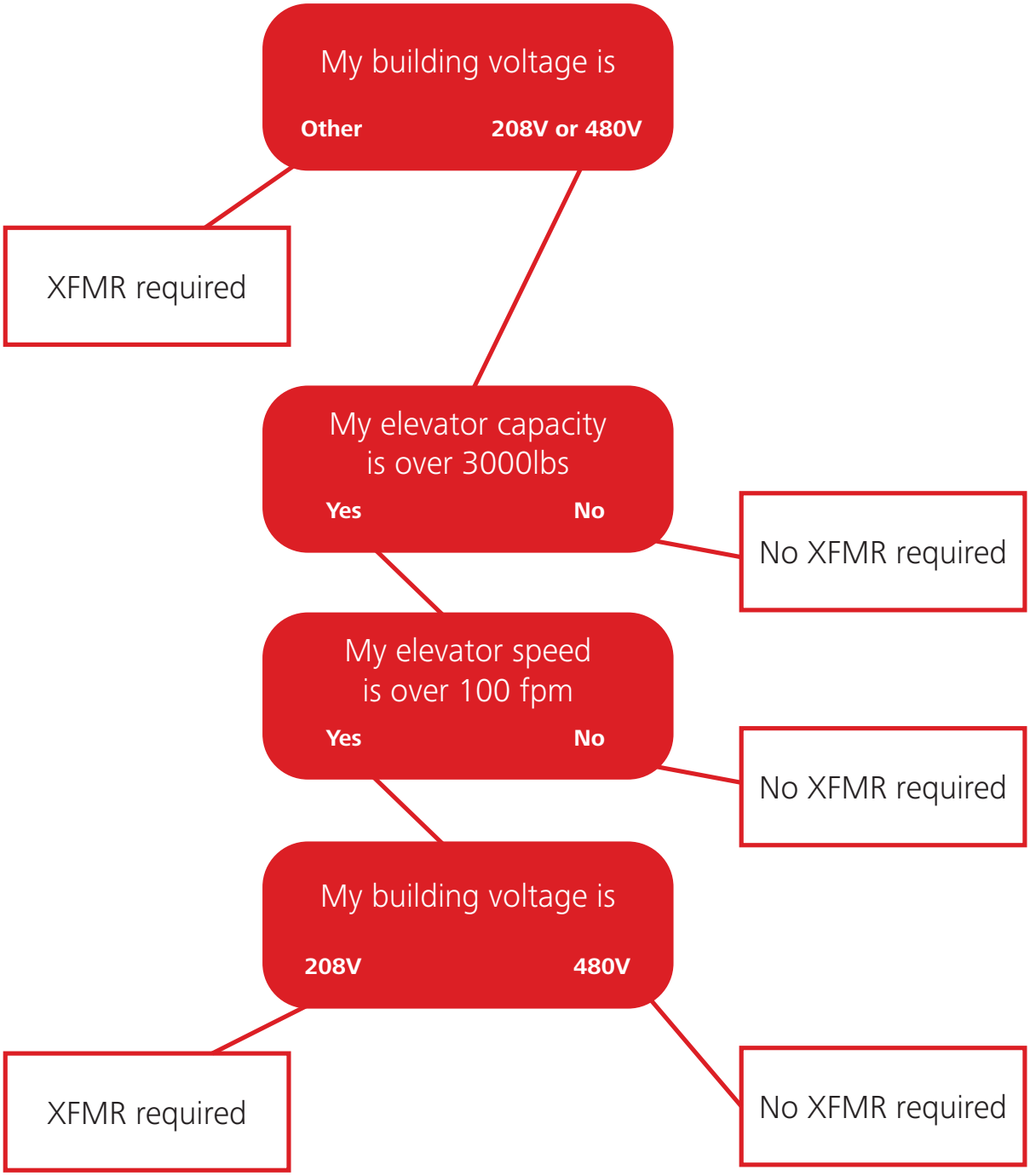

Schindler 3300 MRL/Optimized 3300 MRL

Simplex
Full Room
Wire-run < 45'
Building Voltage == 208VAC or 480VAC
Capacity < 3000#, any Speed
OR
Capacity == 3500#, 480VAC, any Speed
OR
Capacity == 3500#, 208VAC, Speed == 100fpm

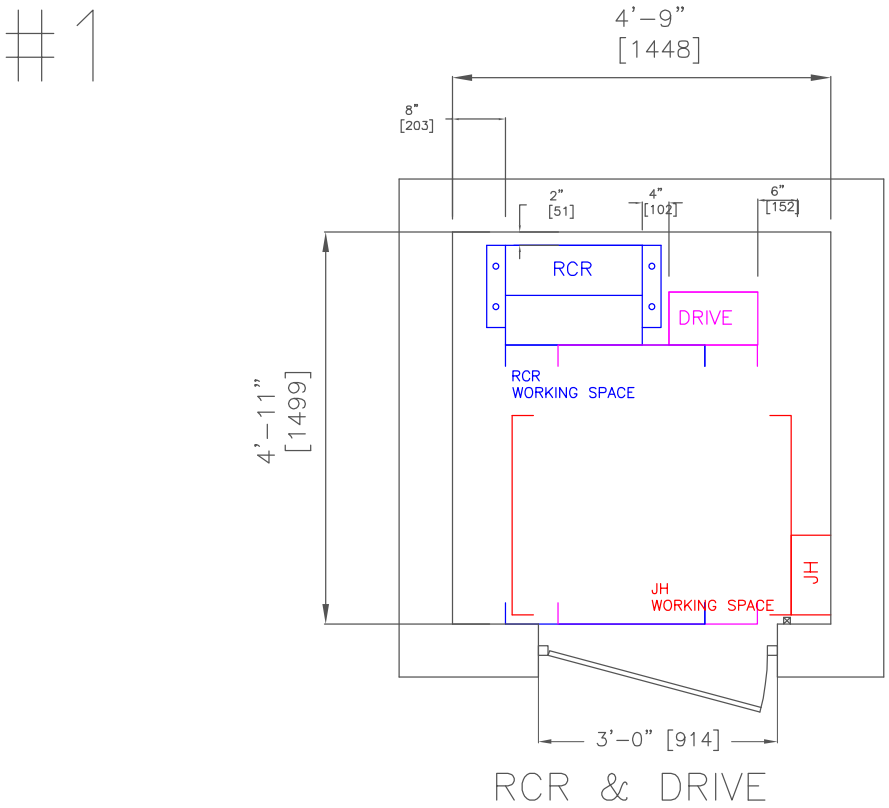

Working Spaces are 30" wide by 42" deep.

Working Spaces which directly over-lap (face each other) are 30" wide and 48" deep.

Schindler 3300 MRL/Optimized 3300 MRL

Simplex
Full Room
Wire-run < 45'
Capacity == 3500#, Speed == 150fpm, Building Voltage == 208VAC
OR
Any Capacity, any Speed, Building Voltage NOT == 208V or 480VAC

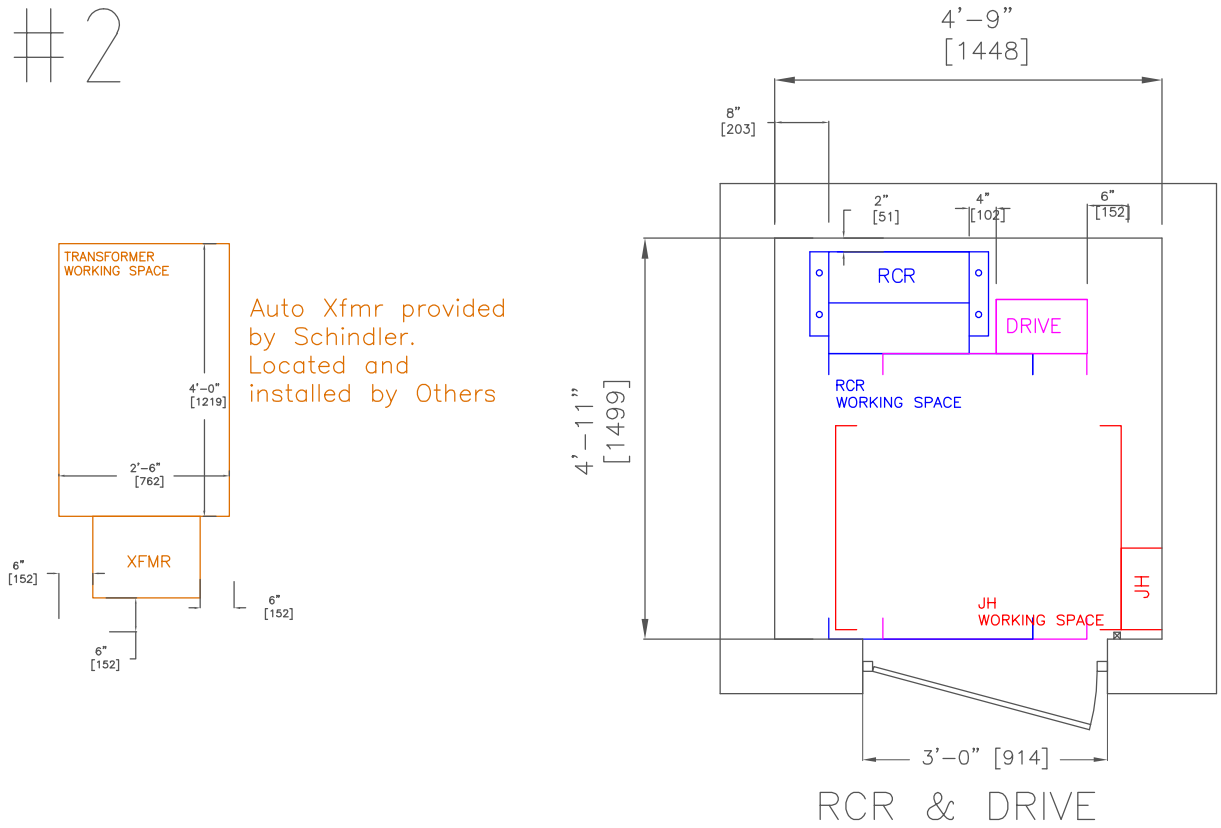

Working Spaces are 30" wide by 42" deep.

Working Spaces which directly over-lap (face each other) are 30" wide and 48" deep.

Schindler 3300 MRL/Optimized 3300 MRL

Simplex
Full Room
Wire-run < 45'
Capacity == 3500#, Speed == 150fpm, Building
Voltage == 208VAC
OR
Any Capacity, any Speed, Building Voltage NOT ==
208V or 480VAC

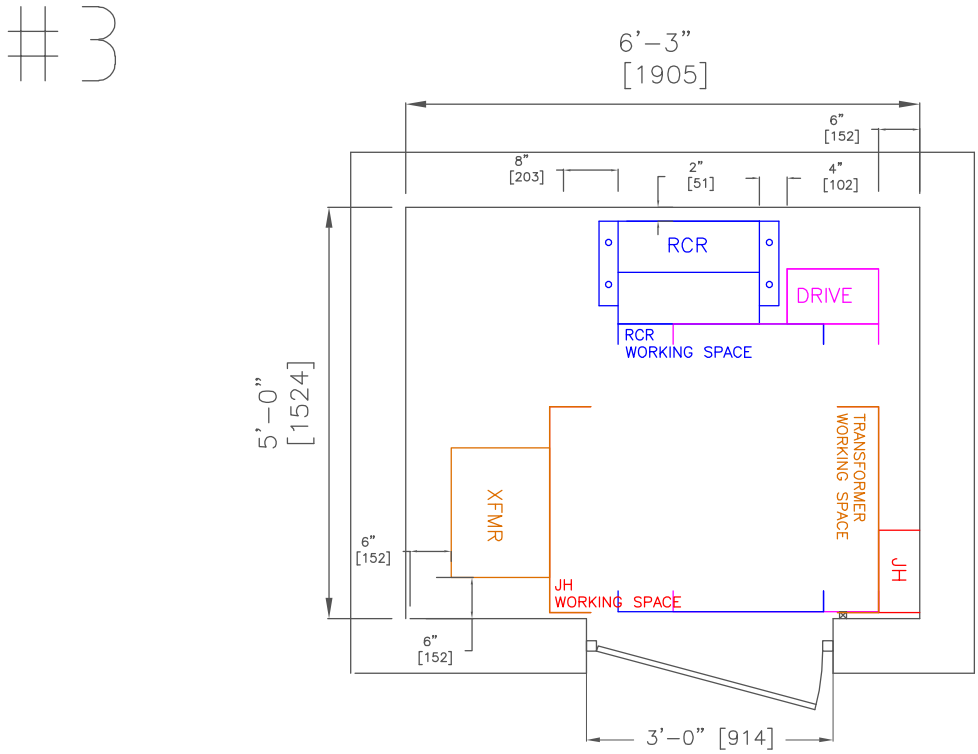

RCR, DRIVE, TRANSFORMER

Working Spaces are 30" wide by 42" deep.

Working Spaces which directly over-lap (face each other) are 30" wide and 48" deep.

Schindler 3300 MRL/Optimized 3300 MRL

Simplex
Full Room
Wire-run > 45’
Building Voltage == 208VAC or 480VAC
Capacity < 3000#, any Speed
OR
Capacity == 3500#, 480VAC, any Speed
OR
Capacity == 3500#, 208VAC, Speed == 100f

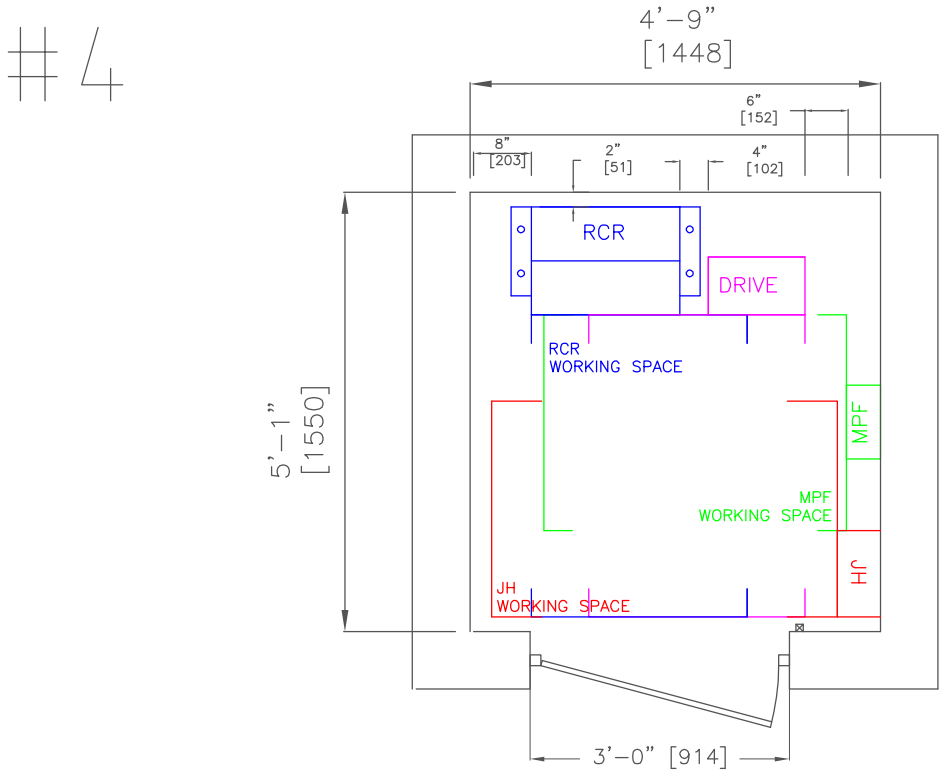

Working Spaces are 30” wide by 42” deep.

Working Spaces which directly over-lap (face each other) are 30” wide and 48” deep.

Schindler 3300 MRL/Optimized 3300 MRL

Simplex
Full Room
Wire-run > 45'
Capacity == 3500#, Speed == 150fpm, Building Voltage == 208VAC
OR
Any Capacity, any Speed, Building Voltage NOT == 208V or 480VAC

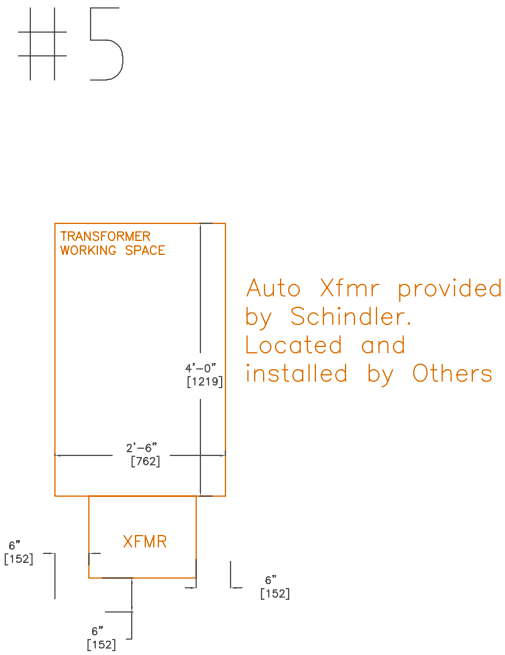

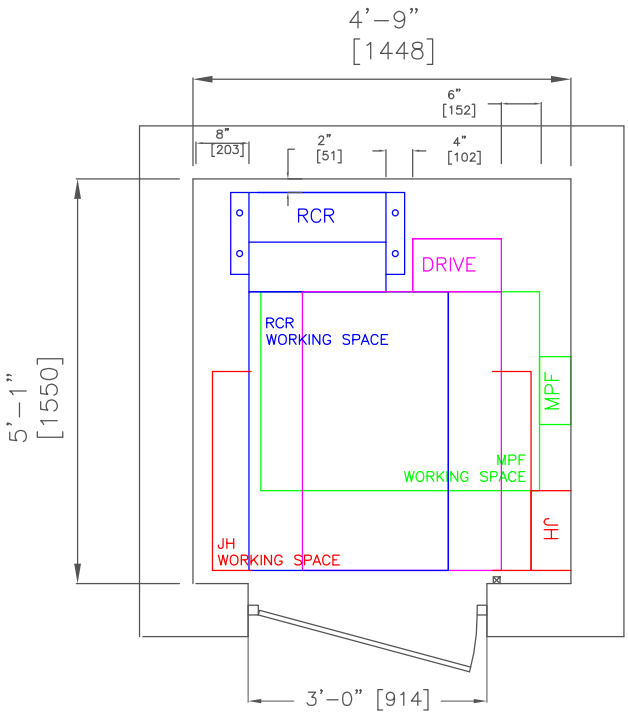

RCR, DRIVE, FILTER

Working Spaces are 30" wide by 42" deep.

Working Spaces which directly over-lap (face each other) are 30" wide and 48" deep.

Schindler 3300 MRL/Optimized 3300 MRL

Simplex
Full Room
Wire-run > 45'
Capacity == 3500#, Speed == 150fpm, Building Voltage == 208VAC
OR
Any Capacity, any Speed, Building Voltage NOT == 208V or 480VAC

#6

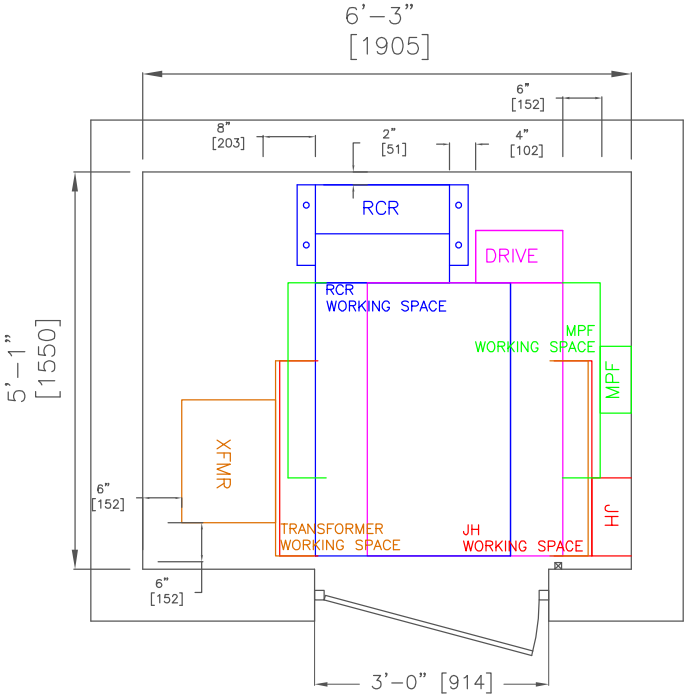

RCR, DRIVE, TRANSFORMER, FILTER

Working Spaces are 30" wide by 42" deep.

Working Spaces which directly over-lap (face each other) are 30" wide and 48" deep.

Schindler 3300 MRL/Optimized 3300 MRL

Duplex
Full Room
Wire-run < 45'
Building Voltage == 208VAC or 480VAC
Capacity < 3000#, any Speed
OR
Capacity == 3500#, 480VAC, any Speed
OR
Capacity == 3500#, 208VAC, Speed == 100fpm

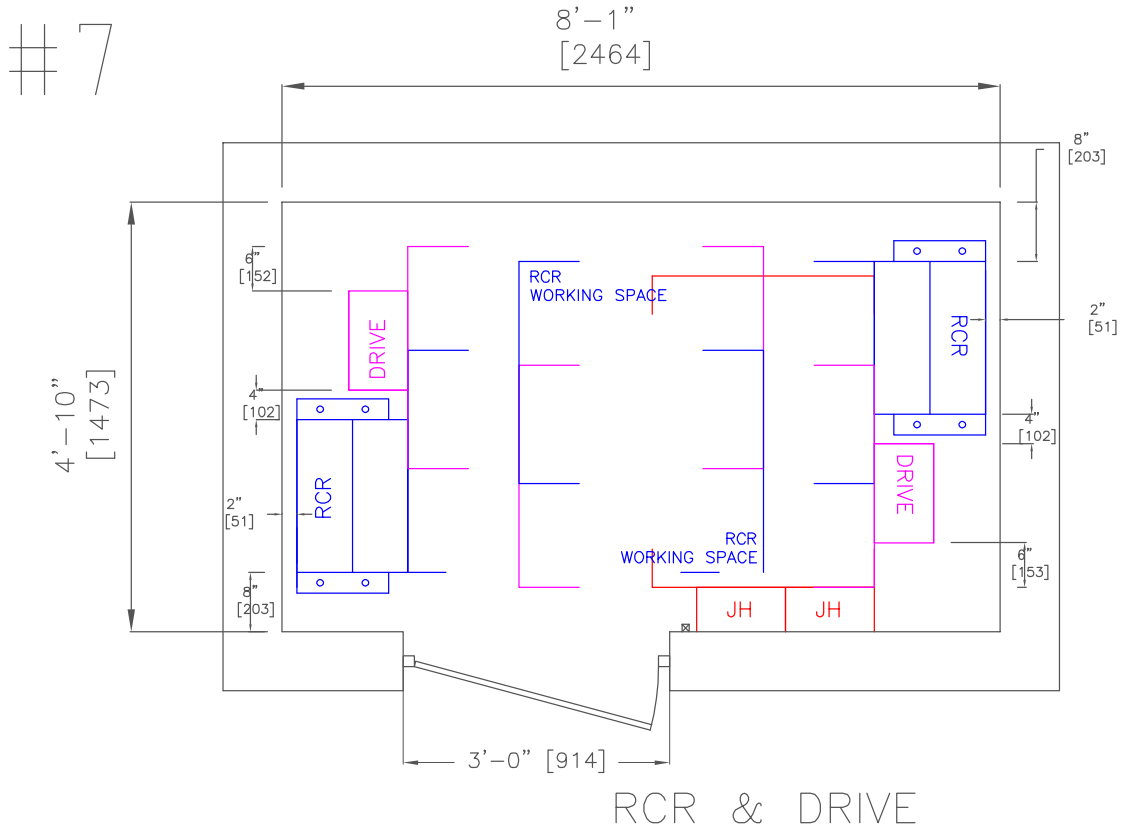

Working Spaces are 30" wide by 42" deep.

Working Spaces which directly over-lap (face each other) are 30" wide and 48" deep.

Schindler 3300 MRL/Optimized 3300 MRL

Duplex
Full Room
Wire-run < 45’
Capacity == 3500#, Speed == 150fpm, Building Voltage == 208VAC
OR
Any Capacity, any Speed, Building Voltage NOT == 208V or 480VAC

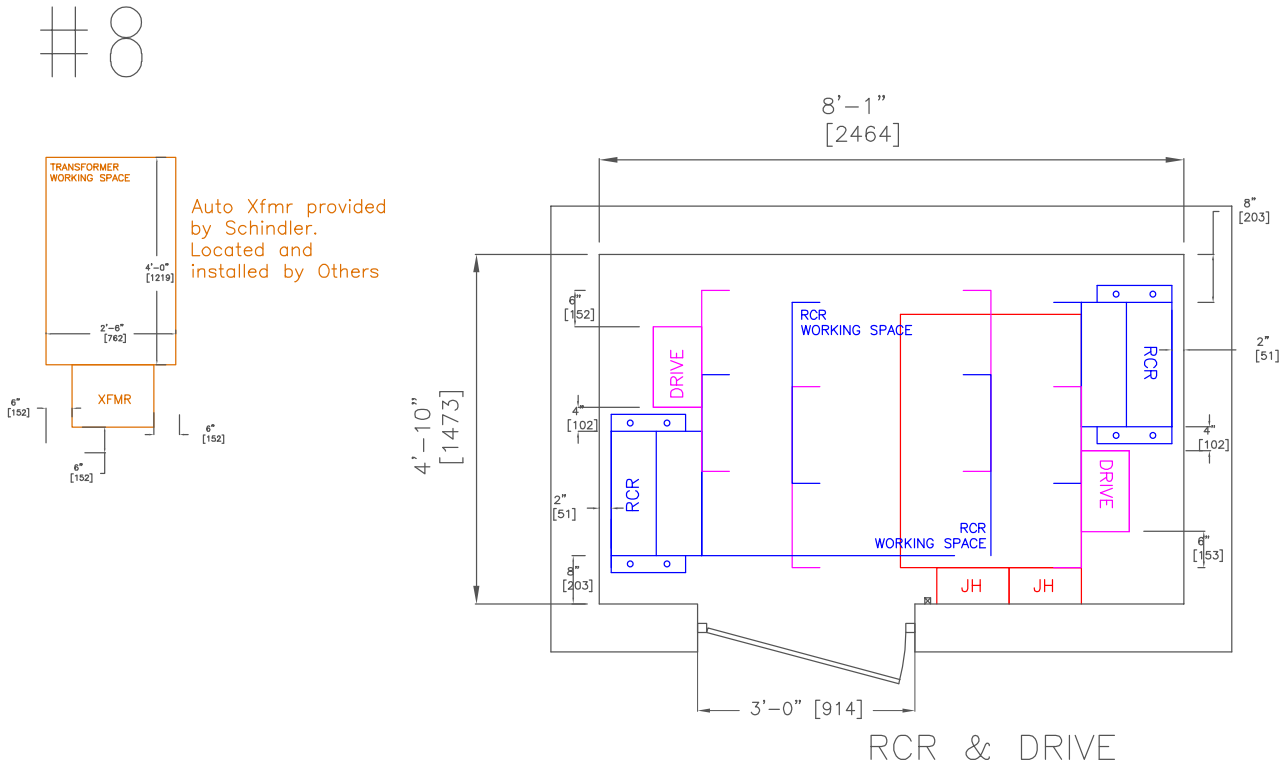

Working Spaces are 30” wide by 42” deep.

Working Spaces which directly over-lap (face each other) are 30” wide and 48” deep.

Schindler 3300 MRL/Optimized 3300 MRL

Duplex
Full Room
Wire-run < 45'
Capacity == 3500#, Speed == 150fpm, Building
Voltage == 208VAC
OR
Any Capacity, any Speed, Building Voltage NOT ==
208V or 480VAC

#9

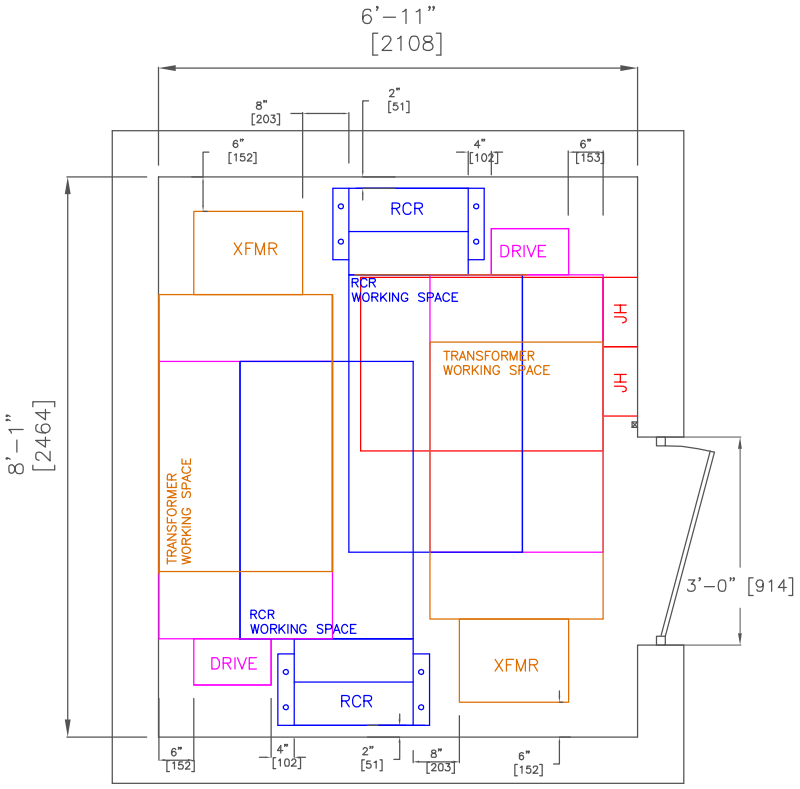

RCR, DRIVE, TRANSFORMER

Working Spaces are 30" wide by 42" deep.

Working Spaces which directly over-lap (face each other) are 30" wide and 48" deep.

Schindler 3300 MRL/Optimized 3300 MRL

Duplex
Full Room
Wire-run > 45’
Building Voltage == 208VAC or 480VAC
Capacity < 3000#, any Speed
OR
Capacity == 3500#, 480VAC, any Speed
OR
Capacity == 3500#, 208VAC, Speed == 100fpm

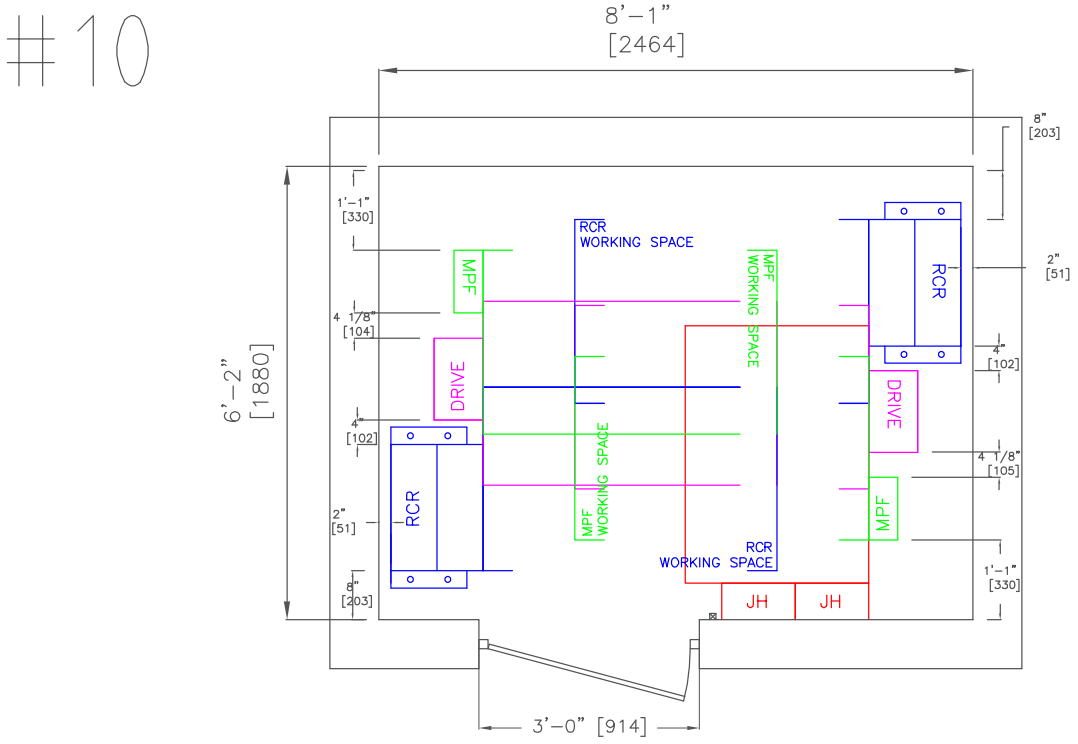

RCR, DRIVE, FILTER

Working Spaces are 30” wide by 42” deep.

Working Spaces which directly over-lap (face each other) are 30” wide and 48” deep.

Schindler 3300 MRL/Optimized 3300 MRL

Duplex
Full Room
Wire-run > 45’
Capacity == 3500#, Speed == 150fpm, Bld Voltage == 208VAC
OR
Any Capacity, any Speed, Building Voltage NOT == 208V or 480VAC

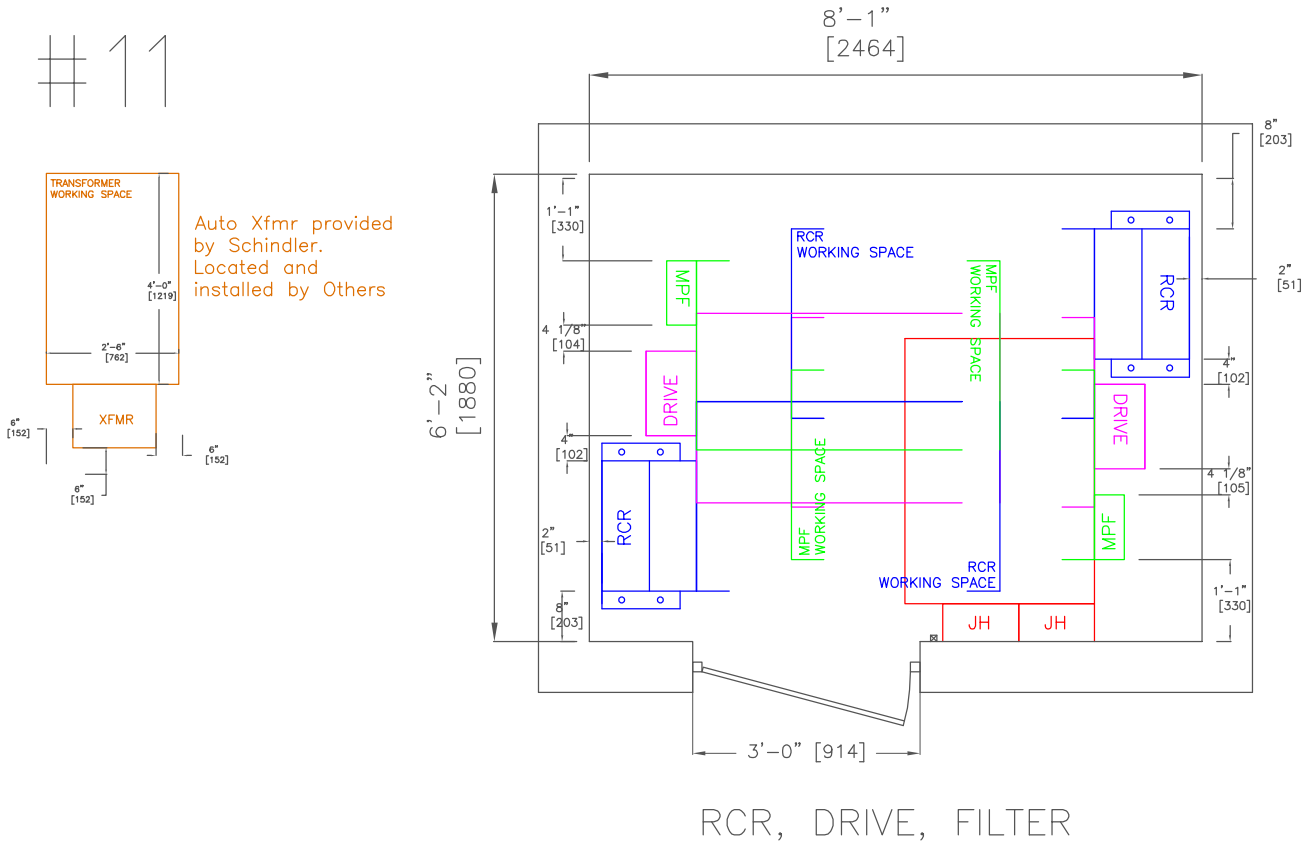

Working Spaces are 30” wide by 42” deep.

Working Spaces which directly over-lap (face each other) are 30” wide and 48” deep.

Schindler 3300 MRL/Optimized 3300 MRL

Duplex
Full Room
Wire-run > 45’
Capacity == 3500#, Speed == 150fpm, Building Voltage == 208VAC
OR
Any Capacity, any Speed, Building Voltage NOT == 208V or 480VAC

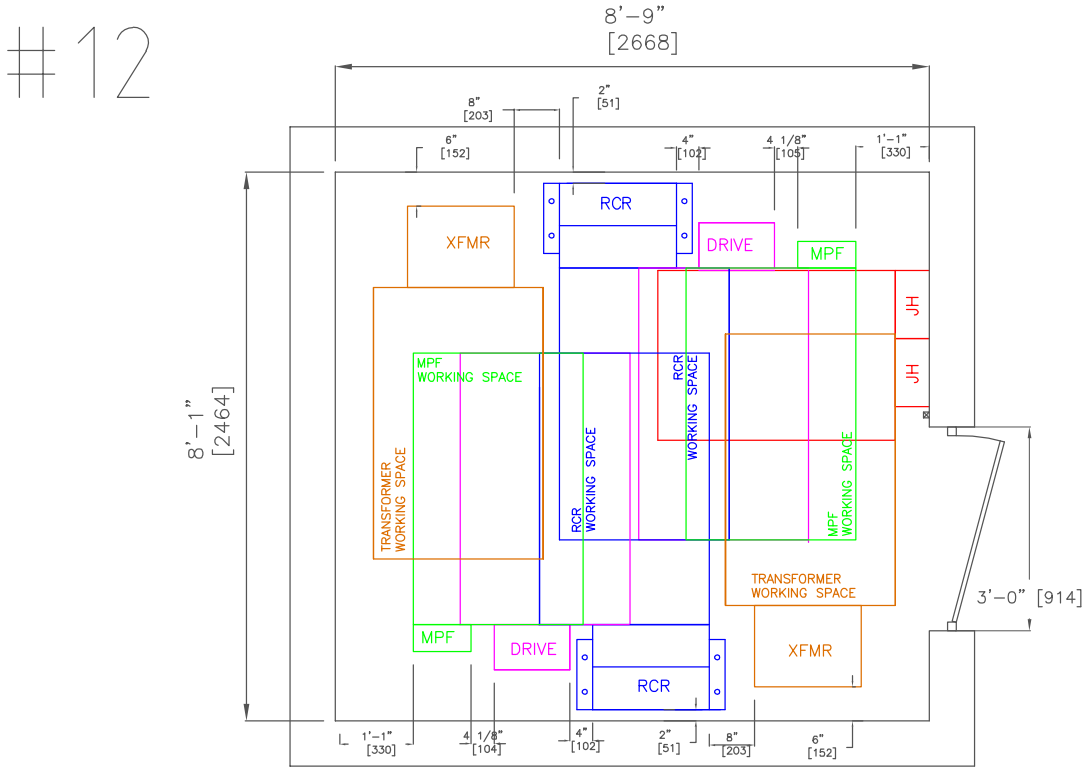

RCR, DRIVE, TRANSFORMER, FILTER

Working Spaces are 30” wide by 42” deep.

Working Spaces which directly over-lap (face each other) are 30” wide and 48” deep.

Schindler 3300 MRL/Optimized 3300 MRL

Simplex (or two separate spaces for a Duplex)
Room
Wire-run < 45'
Building Voltage == 208VAC or 480VAC
Capacity < 3000#, any Speed
OR
Capacity == 3500#, 480VAC, any Speed
OR
Capacity == 3500#, 208VAC, Speed == 100fpm

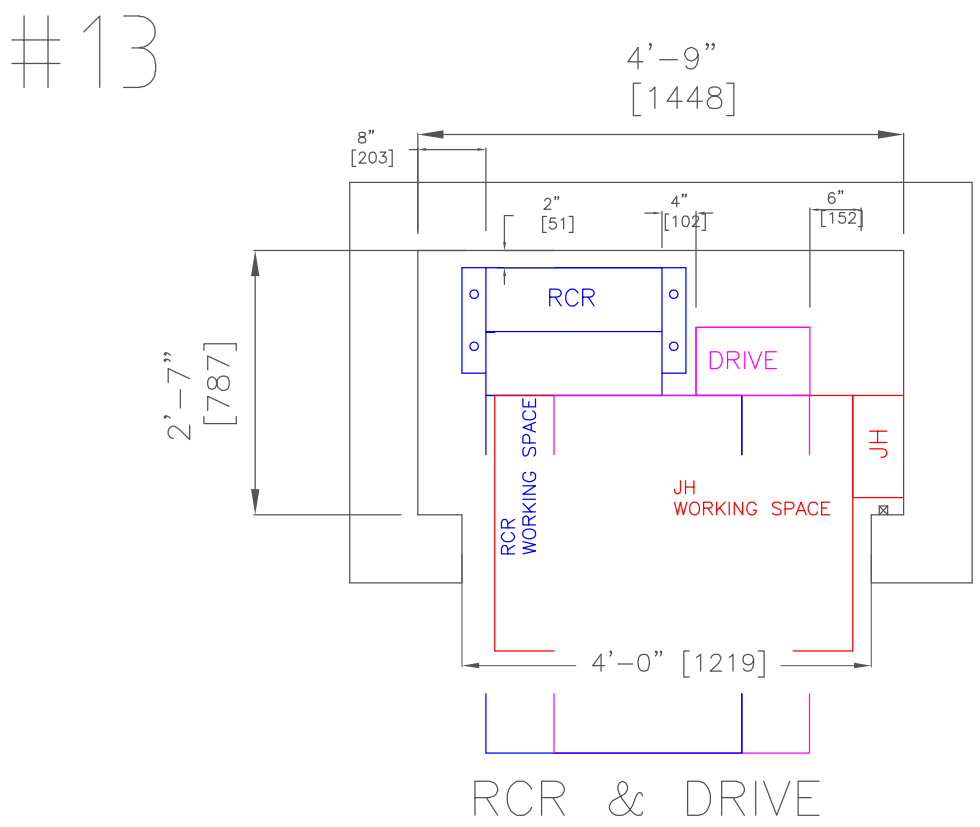

Working Spaces are 30" wide by 42" deep.

Working Spaces which directly over-lap (face each other) are 30" wide and 48" deep.

At this time only Rooms should be offered unless proof of AHJ Code Acceptance (CEC 2013 for California) can be provided to Engineering.

Schindler 3300 MRL/Optimized 3300 MRL

Simplex (or two separate spaces for a Duplex)
Room
Wire-run < 45'
Capacity == 3500#, Speed == 150fpm, Building
Voltage == 208VAC
OR
Any Capacity, any Speed, Building Voltage NOT ==
208V or 480VAC

#14

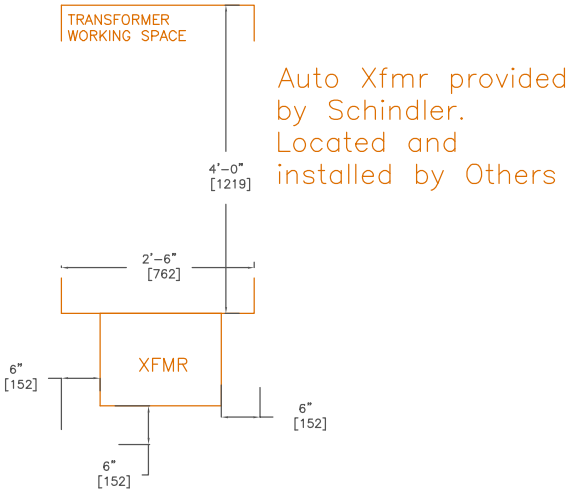

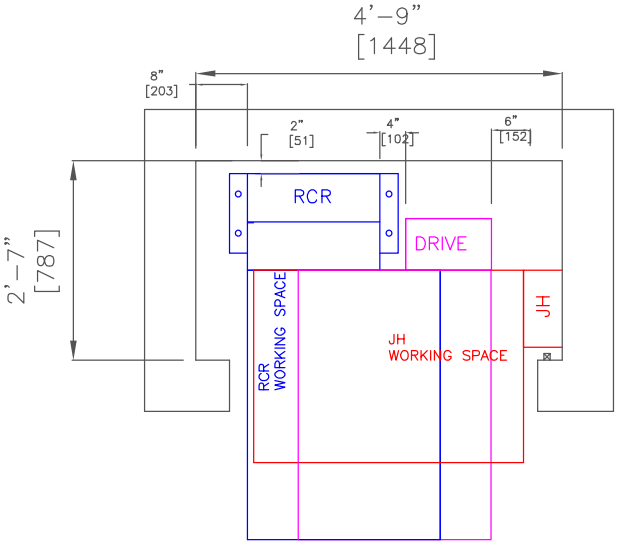

RCR & DRIVE

Working Spaces are 30" wide by 42" deep.

Working Spaces which directly over-lap (face each other) are 30" wide and 48" deep.

At this time only Rooms should be offered unless proof of AHJ Code Acceptance (CEC 2013 for California) can be provided to Engineering.

Schindler 3300 MRL/Optimized 3300 MRL

Simplex (or two separate spaces for a Duplex)
Room
Wire-run < 45'
Capacity == 3500#, Speed == 150fpm, Building
Voltage == 208VAC
OR
Any Capacity, any Speed, Building Voltage NOT ==
208V or 480VAC

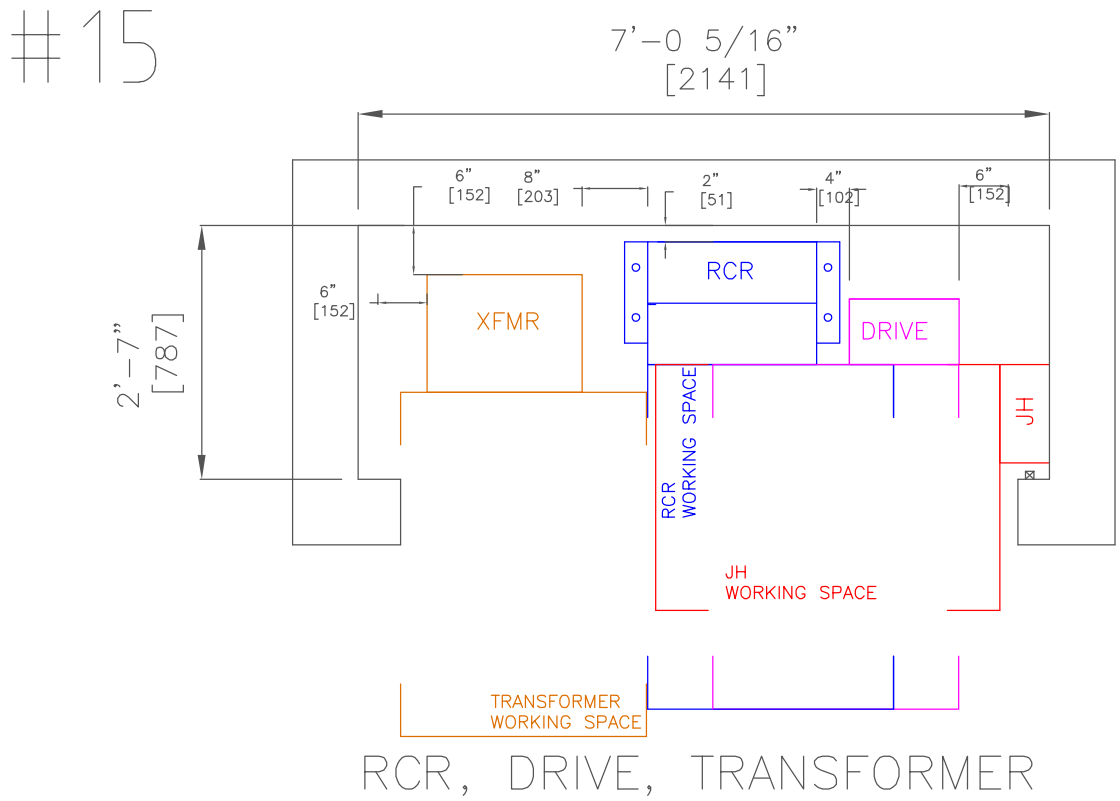

Working Spaces are 30" wide by 42" deep.

Working Spaces which directly over-lap (face each other) are 30" wide and 48" deep.

At this time only Rooms should be offered unless proof of AHJ Code Acceptance (CEC 2013 for California) can be provided to Engineering.

Schindler 3300 MRL/Optimized 3300 MRL

Simplex (or two separate spaces for a Duplex)
Room
Wire-run > 45'
Building Voltage == 208VAC or 480VAC, Capacity
< 3000#, any Speed
OR
Capacity == 3500#, 480VAC, any Speed
OR
Capacity == 3500#, 208VAC, Speed == 100fpm

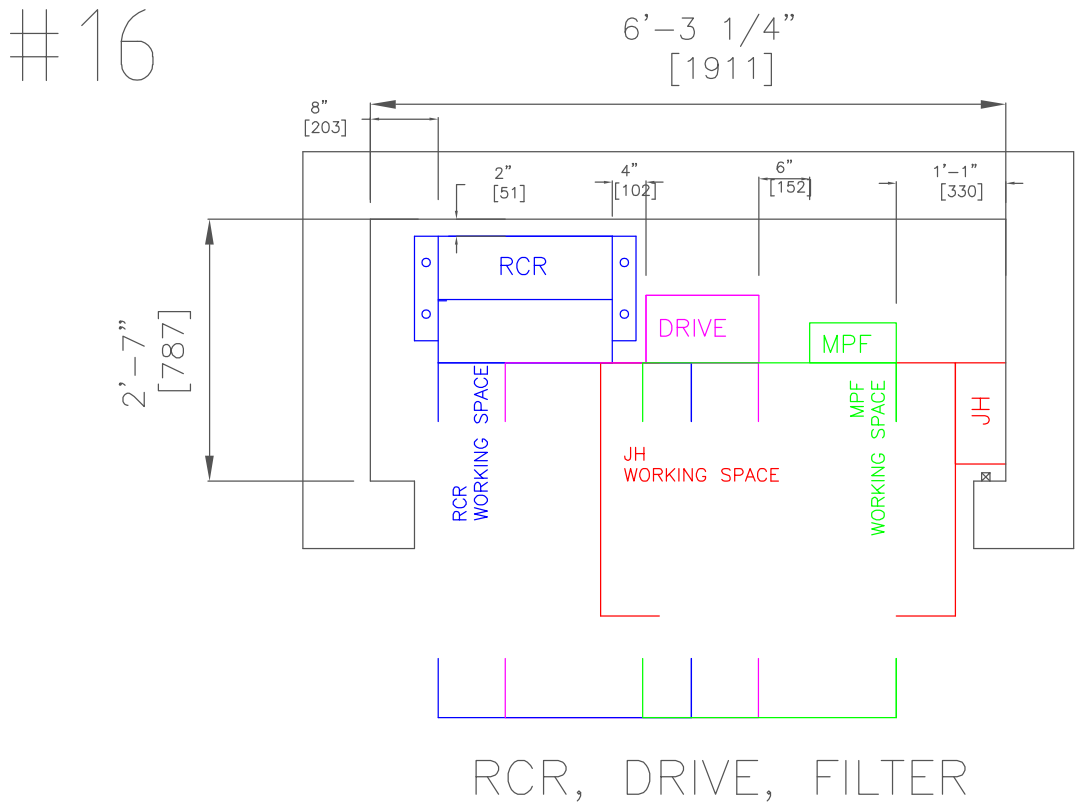

Working Spaces are 30" wide by 42" deep.

Working Spaces which directly over-lap (face each other) are 30" wide and 48" deep.

At this time only Rooms should be offered unless proof of AHJ Code Acceptance (CEC 2013 for California) can be provided to Engineering.

Schindler 3300 MRL/Optimized 3300 MRL

Simplex (or two separate spaces for a Duplex)
Room
Wire-run > 45'
Capacity == 3500#, Speed == 150fpm, Building
Voltage == 208VAC
OR
Any Capacity, any Speed, Building Voltage NOT ==
208V or 480VAC

#17

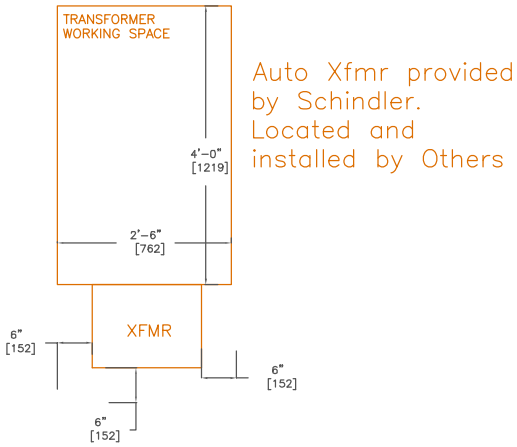

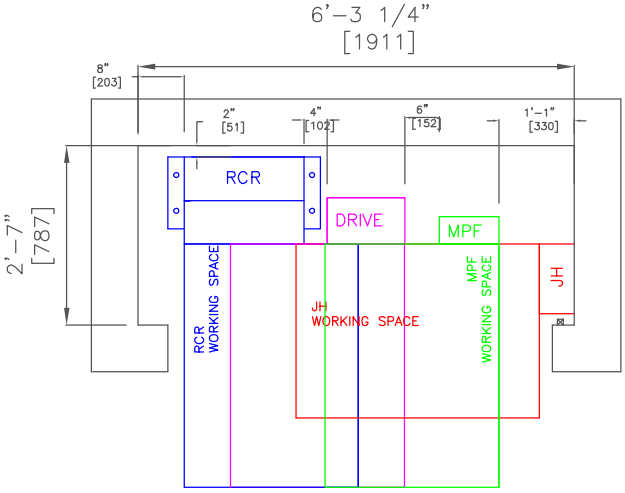

RCR, DRIVE, FILTER

Working Spaces are 30" wide by 42" deep.

Working Spaces which directly over-lap (face each other) are 30" wide and 48" deep.

At this time only Rooms should be offered unless proof of AHJ Code Acceptance (CEC 2013 for California) can be provided to Engineering.

Schindler 3300 MRL/Optimized 3300 MRL

Simplex (or two separate spaces for a Duplex)
Room
Wire-run > 45'
Capacity == 3500#, Speed == 150fpm, Building
Voltage == 208VAC
OR
Any Capacity, any Speed, Building Voltage NOT ==
208V or 480VAC

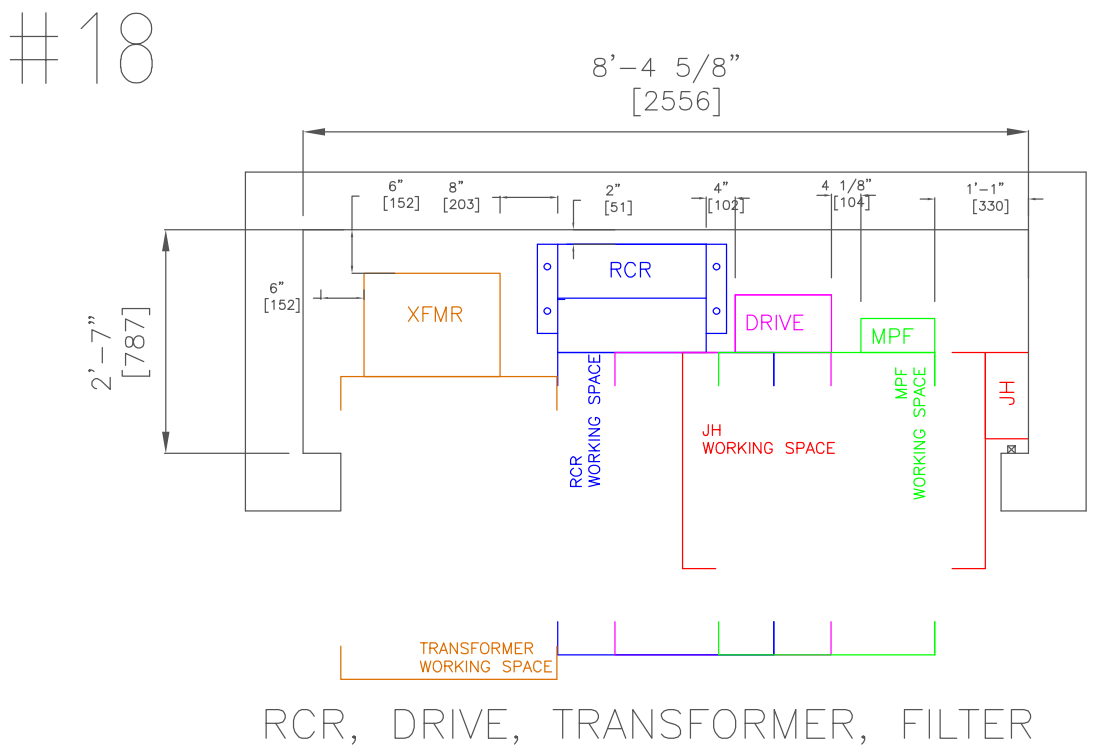

Working Spaces are 30" wide by 42" deep.

Working Spaces which directly over-lap (face each other) are 30" wide and 48" deep.

At this time only Rooms should be offered unless proof of AHJ Code Acceptance (CEC 2013 for California) can be provided to Engineering.

Schindler Expanded 3300
Planning Data

Standard Speeds: 150, 200, 350 fpm (0.5, 0.75, 1.78 m/s)
Stops, Openings: 24 openings max
Travel: Up to 170’ (52 m)

Hatch plans

Front opening two-speed left opening (2SSO)

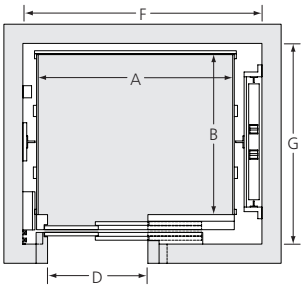

Front/rear opening (ix) two-speed left opening (2SSO)

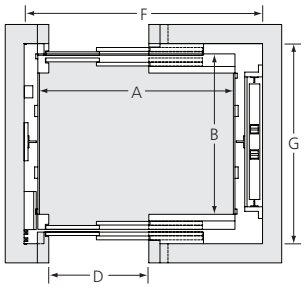

Front opening two-speed right opening (2SSO)

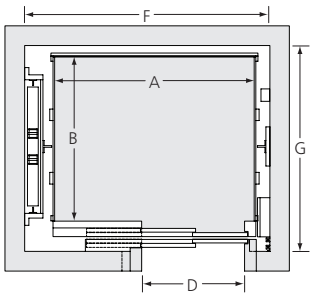

Front/rear opening (ix) two-speed right opening (2SSO)

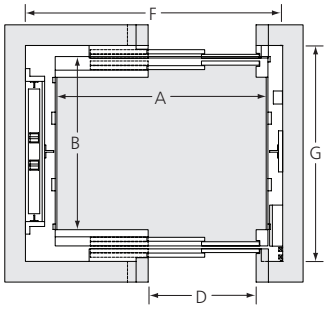

Front opening single-speed center opening (SSCO)

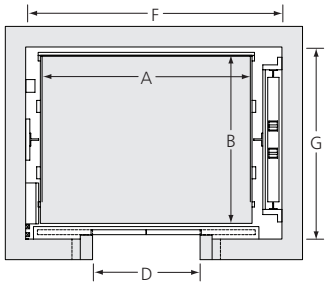

Front/rear opening single-speed center opening (SSCO)

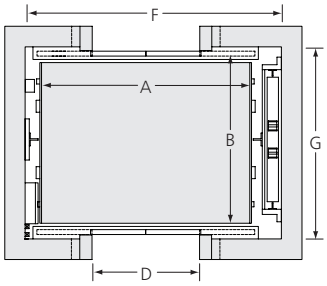

Hoistways

Front opening

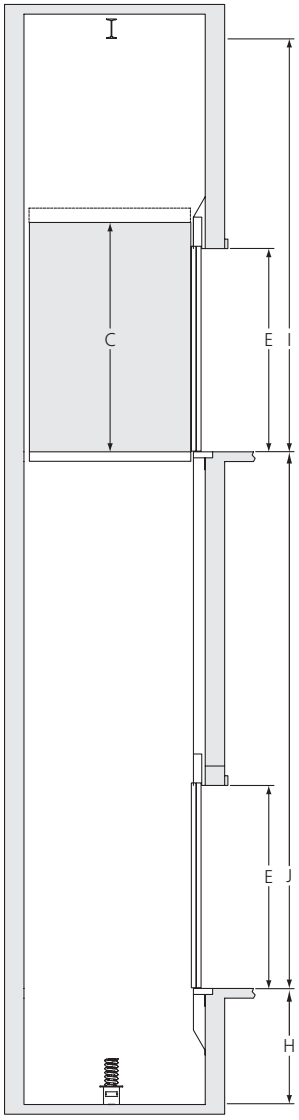

Front/rear opening

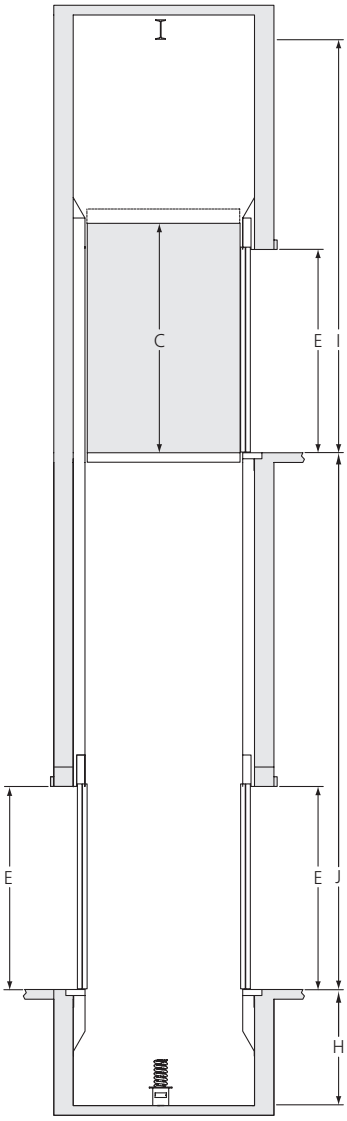

General Purpose, Hospital/Service
Specifications and Layout Data

Load Capacity lbs (kg)	Cab Width ft-in (mm)	Cab Depth ft-in (mm)	Door Type Door height (7', 8', 9')	Door Width ft-in (mm)	Hoistway Width ft-in (mm)	Hoistway Depth Front only ft-in (mm)	Hoistway Depth Front & Rear ft-in (mm)
General Purpose							
3,500 (1,590)	6'-4 9/16" (1945)	5'-6 15/16" (1700)	SSCO	3'-6" (1067)	8'-8" (2540)	6'-11 1/16" (2110)	7'-4 1/2" (2248)
	6'-4 9/16" (1945)	5'-6 15/16" (1700)	2SSO	3'-6" (1067)	8'-8" (2540)	6'-11 1/16" (2110)	7'-7 11/16" (2328)
4,000 (1,815)	7'-4 3/16" (2240)	5'-7" (1700)	SSCO	4'-0" (1219)	9'-8" (2843)	6'-8 1/8" (2035)	7'-4 3/16" (2240)
Hospital Service							
4,000 (1,815)	5'-4 1/4" (1632)	7'-8 1/2" (2350)	2SSO	4'-0" (1219)	7'-8" (2235)	8'-11 5/16" (2725)	9'-9" (2970)
4,500 (2,040)	5'-4 1/4" (1632)	8'-2 1/2" (2500)	2SSO	4'-0" (1219)	7'-8" (2235)	9'-5 3/16" (2875)	10'-2 7/8" (3120)
5,000 (2,270)	5'-4 1/4" (1632)	8'-8 5/16" (2650)	2SSO	4'-0" (1219)	7'-8" (2235)	9'-11 1/8" (3025)	10'-8 3/4" (3270)
	5'-10 7/8" (1800)	8'-8 5/16" (2650)	2SSO	4'-6" (1372)	8'-0 5" (2446)	9'-11 1/8" (3025)	10'-8 3/4" (3270)

Speed fpm (m/s)	Height ft-in (mm)	Clear Overhead [3] PU Buffer Minimum [5] ft-in (mm)	Clear Overhead [3] Spring Buffer Minimum ft-in (mm)	Pit Depth [5] PU Buffer/Spring Buffer Minimum ft-in (mm)
150 (0.76)	7'-9" (2362)	12'-7" [5] (3835)	12'-11 1/4" (3942)	5'-0" (1524)
	9'-0" (2743)	13'-10" [5] (4216)	14'-2 1/4" (4323)	5'-0" (1524)
	10'-0" (3048)	14'-10" [5] (4521)	15'-2 1/4" (4628)	5'-0" (1524)
200 (1.02)	7'-9" (2362)	12'-8" [5] (3858)	13'-4 3/16" (4068)	5'-0" (1524)
	9'-0" (2743)	13'-11" [5] (4239)	14'-7 3/16" (4449)	5'-0" (1524)
	10'-0" (3048)	14'-11" [5] (4544)	15'-7 3/16" (4754)	5'-0" (1524)
		Oil Buffer ft-in (mm)	Oil Buffer ft-in (mm)	
3,500 lbs only **350** (1.78)	7'-9" (2362)	13'-4" (4060)	5'-0" (1524)	
	9'-0" (2743)	14'-7 3/16" (4449)	5'-0" (1524)	
	10'-0" (3048)	15'-7 3/16" (4754)	5'-0" (1524)	

Notes:

1. 2SSO doors are available with right or left openings as are optional diagonal doors, if necessary for stretcher compliance. Please contact your local Schindler Sales Representative for more details.
2. Up to four car group operation is available. Please consult with your local Schindler Sales Representative for more information.
3. Clear overhead is defined as from the lowest point below any obstruction such as: hoist beam(s), building beams, or roof structure.
4. Where permitted by code, no control space is required. A 3-phase and 110v disconnect must be located in both the hoistway overhead and a location in the building outside of the hoistway. The latter is not required to be an elevator-dedicated space.
5. PU buffer requires a local code review. Please contact your local Schindler Sales Representative for additional PU buffer information.
6. These dimensions are for information only and cannot be used for construction purposes without Schindler confirmation. Confirm with your local Schindler Sales Representative.
7. The unique hoistway dimensions shown above take installation margin and seismic projects into account. The hoistway width dimensions above represent nominal dimensions with -/+2" tolerance evenly distributed on both sides. If necessary, this elevator can fit into industry standard hydraulic hoistway widths, but with zero negative tolerance. Please contact your local Schindler Sales Representative for more details.

Schindler Expanded 3300

Simplex with wire run
up to 82ft

5'-8" W x 4'-2" D

- With or without AE
- MPFGEN2 (<=82FT)
- DISCONNECTS (JH & JL)

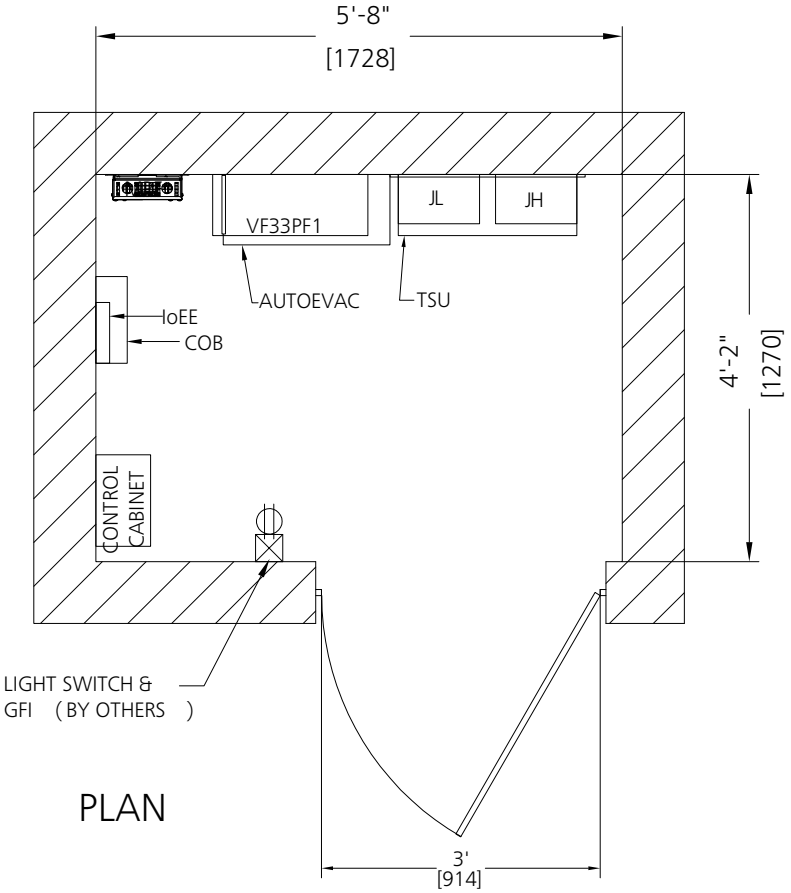

Schindler Expanded 3300

Simplex with wire run
greater than 82ft

6'-8" W x 4'-2" D

- With or without AE
- MPFGEN1 (>82FT)
- DISCONNECTS (JH & JL)

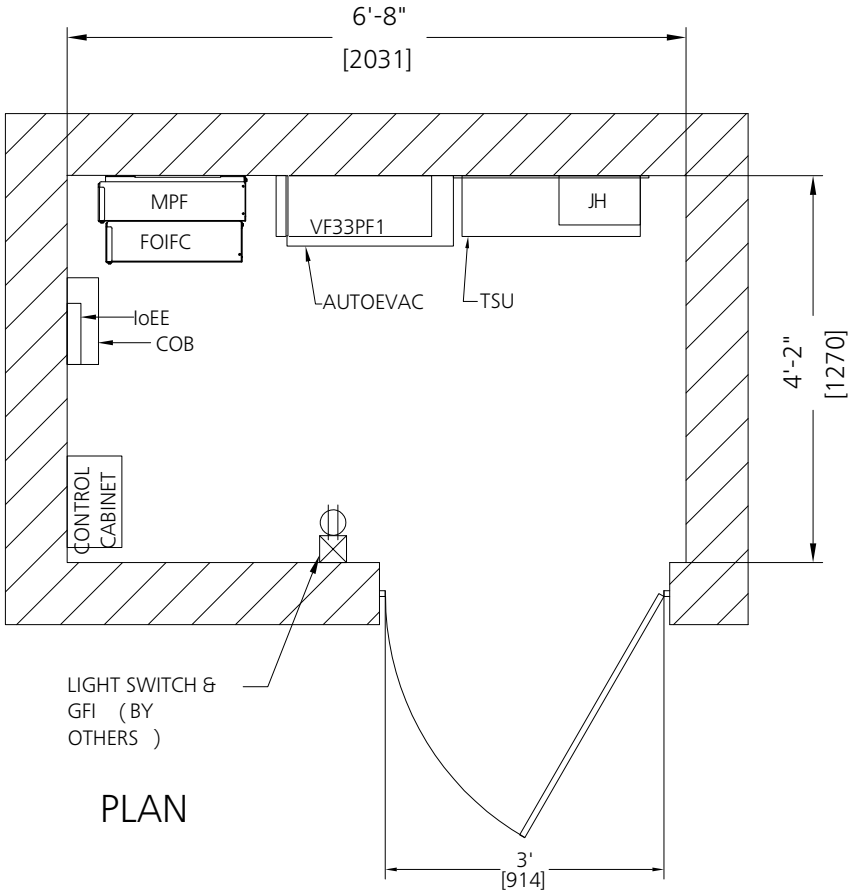

Schindler Expanded 3300

Duplex with wire run up to 82ft

8' W x 6'-5 5/8" D

- With or without AE
- MPFGEN2 (<=82FT)
- DISCONNECTS (JH & JL)
- ECVAB W/ BATTERY BOX

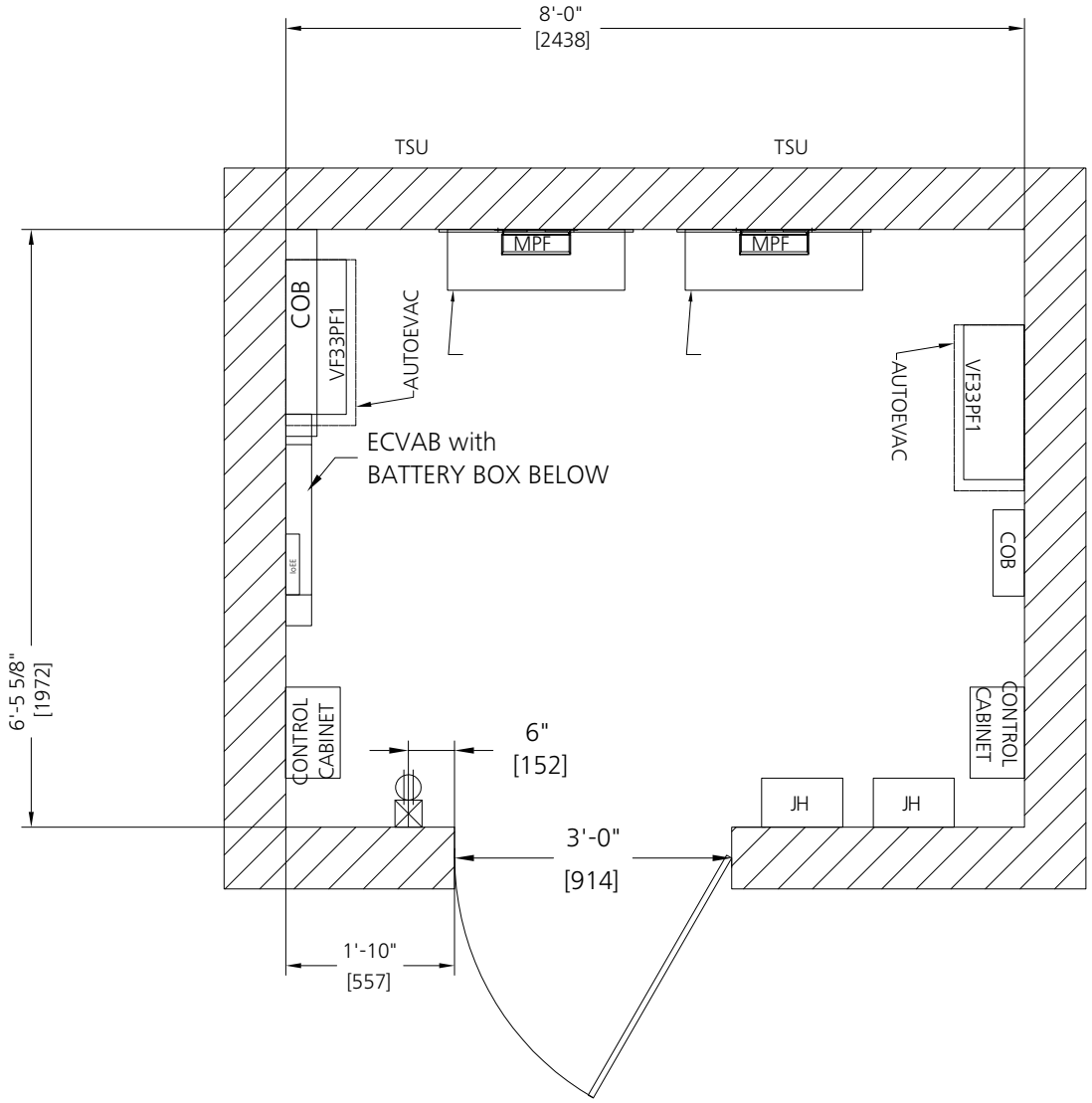

Schindler Expanded 3300

8' W x 8'- $\frac{3}{8}$" D

Duplex with wire run greater than 82ft

- With or without AE
- MPFGEN1 (>82FT)
- DISCONNECTS (JH & JL)
- ECVAB W/ BATTERY BOX

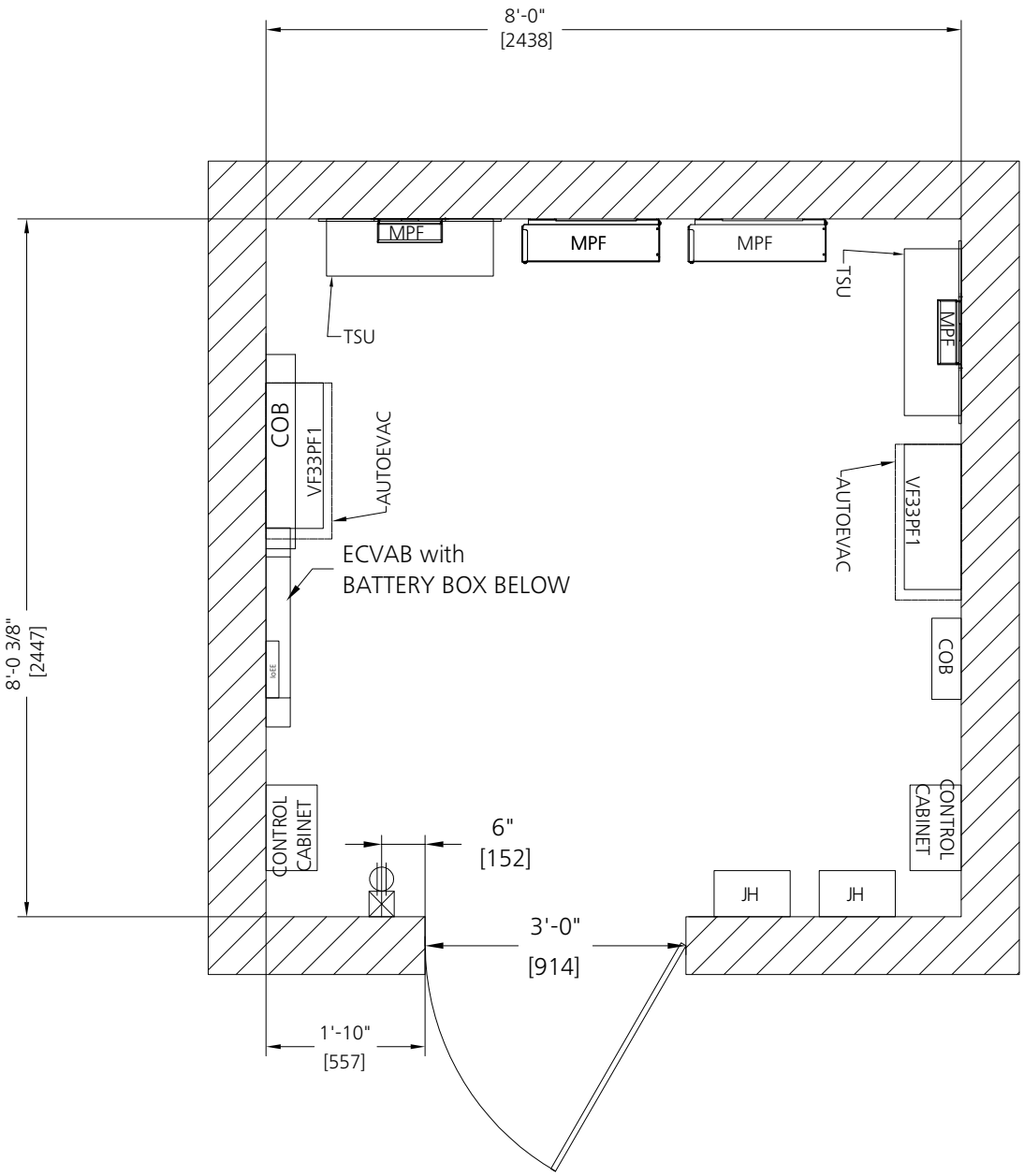

Schindler 3300

For use in California

General requirements

Requirements for installation vary by type of equipment selected. These general requirements assist you in preparing your building for the installation of Schindler elevators. All designs, clearances, construction, workmanship and materials, unless specifically excepted, shall be in accordance with the requirements of the latest published ASME A17.1 Code for electric traction elevators plus applicable building code and local codes. State or local requirements must be used if more stringent.

Items to be provided — A complete installation includes the following items not included in the elevator contract:

1. Clear, plumb hoistway, with variations on a minimum dimension hoistway not to exceed –0" and +1" (25.4 mm) per side at any point. Tolerance may increase to variations not to exceed –1" (–25.4 mm) and +1" (25.4 mm) per side at any point when an additional 2" (50.8 mm) is provided on the hoistway width dimension.
2. Two-hour fire resistance of hoistway walls or rating to meet applicable local codes. 75° bevel guards on all projections, recesses or setbacks over 4" (102 mm) except on side used for loading or unloading. The overhead machinery space temperature at top of hoistway to be maintained between 41° F (5° C) and 104° F (40° C) and < 95% relative humidity, non-condensing.
3. Supports for rail brackets at pit, each floor and one or two locations above top floor in the overhead (application dependent). Divider beams between hoistways at each floor level and one or two locations above top floor in the overhead for guide rail bracket supports. Locate per layout. For masonry block hoistway construction, Schindler will provide rail bracket inserts for installation by others, located per the Schindler final layout drawings. Where inserts are not used, hollow masonry blocks are not acceptable for bracket fastening. Provide 125 mm (5") concrete belt around hoistway or other acceptable support at each floor, in overhead, and intermediate levels (if required). For max. rail bracket vertical spacing, contact your local sales representative.
4. Supply hoist/safety beam for elevator construction and service work. Beam to run across the width of the elevator shaft. Locate per layout. Hoist beam to be left in place after elevator installation.
5. A temporary work platform is required for installation. It is to be constructed at the top floor of each elevator. It must comply with applicable governing codes and regulations. The platform shall be securely fastened to the building structure. Erection, maintenance, and removal are by others. (Reference Schindler drawing TD440.)
6. Lighting, light switch and duplex receptacle (GFCI) for each elevator, in the center of hoistway pit and in the elevator overhead/machinery space, as indicated by Schindler. The pit light switch located adjacent to access door.
7. Recesses, supports, and patching, as required, to accommodate hall button boxes, signal fixtures, etc. (if required).
8. All barricades outside elevator hoistways or between elevators inside hoistways.
9. Dry pit reinforced to sustain normal vertical forces from rails and buffers.
10. Drains & sumps in elevator pits, where provided, shall comply with the plumbing code, and shall be provided with a positive means to prevent water, gases and odors from entering the hoistway. The cover must be secured and level with the pit floor and located to clear elevator equipment. (Cannot be connected directly to storm drain or sewer.)
11. Pit ladders shall be provided where required.

Inspection and test panel

12. A switch placed adjacent to the jamb-mounted inspection and test panel enclosure shall control lighting in front of the panel. Minimum lighting to be 200 lux (19 fc).
13. A lockable, 13 1/2" x 15 1/2" x 3 1/2" (minimum), metal cabinet with group-1 key to house required electrical schematics and maintenance history documents, shall be wall mounted, adjacent to the disconnect switch, by others, at the top landing. The supplier, location, and mounting of the cabinet shall be coordinated with Schindler.
14. Provide, preferably on the same floor as the elevator inspection and test panel, a lockable panel with a fused disconnect switch or circuit breaker suitable for 3-phase power for the elevator control, and a fused disconnect switch or circuit breaker for car lighting for each elevator in a separate lockable panel adjacent to the 3-phase panel or within the 3 phase panel. The panel(s) must be accessible to qualified personnel only (NEC NFPA req. 620.51[C]) with a Group 2 key (ASME A17.1 req. 8.1.3). Alternative locations for the panel(s) can be considered, provided they are located in accessible areas without obstructions to qualified personnel in compliance with NEC NFPA req. 620.51(C). Locate and mark the panels and disconnects with appropriate signage, (NEC NFPA 70 req. 620-22 and 620-51, or CSA C22.1-02 sections 38-022 and 38-053). The disconnects or circuit breakers may also be located without panels in a Group 2 key-secured room identified and dedicated to elevator apparatus only, and in all cases must be capable of being locked in the open position with a lock that cannot be removed from the devices or panel(s). FOR DRIVE IN HOISTWAY CONFIGURATION ONLY: Electrical contractor to supply an additional lockable auxiliary non-fused disconnect in the hoistway at the location of the drive (motor controller), along with wiring from the main disconnect to the auxiliary disconnect (see also NEC NFPA 70 - 2008 req. 620.51[C]{1}). This disconnect must also be lockable in the open position with a secured lock that cannot be removed from the device.
15. For ALL power circuits:
    a. If a sprinkler head is located in the hoitway or other disconnect location, any disconnect served by that sprinkler head must be NEMA 3 compliant. Sprinklers shall be located at the top and bottom of the hoistway per NFPA 13-2010 requirement 8.15.5.6 (see also 8.15.5.3) and A.8.15.5.3).
    b. In U.S. jurisdictions ONLY, when a sprinkler head is located in the hoistway, the building shall provide shunt trip activation of a) JH, the main disconnect or b) the feed to the main disconnect, triggered by contacts of the fire recall initiating devices (as defined by NFPA). These devices, located in the hoistway or other disconnect location, shall provide independent disconnection of electrical power to both main and auxiliary power circuits prior to sprinkler activation (ASME A17.1-2007/CSA B44-07 rule 2.8.3.3. and/or local code).

Control spaces (When specified in lieu of an Inspection and Test Panel, a partial or full body entry space/room shall be provided.)

16. Enclosed and protected control space at top landing adjacent to the hoistway wall closest to the elevator hoist machine. Two-hour fire rating of control space walls or rating to meet applicable local codes.
17. Provide fire-rated, self-closing, self-locking door. Door must be capable of opening 180 degrees for access to control space.
18. 42" (1067 mm) minimum clear space is required in hallway in front of control space door and top hoistway entrance for service barriers. Additional hallway width may be required, subject to local building, fire and ADA codes.
19. The temperature in front of the control space must be maintained between 32° F (0° C) and 104° F (40° C) and less than 95% relative humidity, non-condensing, for proper operation of equipment.
20. Disconnects for each elevator must be provided per National Electrical Code (NFPA No. 70) and located inside the elevator control space.

Other wiring

21. Suitable copper feeder, ground and branch wiring circuits for signal system and power operated door. Feeder and branch wiring circuits for car light and fan.
22. Telephone outlet provided at the inspection and test panel or in control room (where applicable).
23. All conduit and wire runs remote from either the control space or hoistways (if required).
24. Heat, smoke or products of combustion-sensing devices connected to elevator control space terminals when such devices are required. Sprinklers shall be located at the top and bottom of the hoistway per NFPA 13-2010 requirement 8.15.5.6 (see also 8.15.5.3 and A.8.15.5.3). Shunt trip circuit breaker shall also be installed when sprinklers are present in the hoist way.

Emergency provisions

25. Elevator Firefighter's and other emergency services, depending on height of the building or number of landings, per ASME A17.1 Rule 2.27.3 and local codes.
26. Elevator Firefighter's and other emergency services' wiring and interconnections to automatic sprinkler systems or heat and smoke-sensing devices furnished by others.
27. When emergency/standby power operation of elevators is required, the Electrical Contractor should coordinate with Schindler for operation requirements.
28. Provisions for earthquake protection, dictated by building code, are required in various sections of the country.

Entrances

29. Hoistway walls must have a fire rating per ASME A17.1 Rule 2.1.1.1.
30. Furnishing, installing and maintaining the required fire rating of elevator hoistway walls, including the control spaces and also the penetration of fire wall by elevator fixture boxes (if applicable), is not the responsibility of the elevator contractor.
31. The interface of the elevator wall with the hoistway entrance assembly shall be in strict compliance with the elevator contractor's requirements.
32. Entrance wall and finished floor are not to be constructed until after door frames and sills are
    in place.
    a. Where front walls are of reinforced concrete, the concrete openings must be minimum 16" (406 mm) wider [8" (203 mm) on each side] and 8" (203 mm) higher than the clear opening.
    b. Where drywall or sheet rock construction is used for front walls, it shall be of sufficient strength to maintain the doors in true lateral alignment. Drywall contractor to coordinate with the elevator contractor.
    Note: A support member must be provided for floor heights greater than 15'-0" (4572 mm) to support entrance header struts.
    c. Door frames are to be anchored to walls and properly grouted in place to maintain legal fire rating (masonry construction).
33. Filling and grouting around entrance by others.
34. Where openings occur, all walls and sill supports must be plumb.

U.S. Headquarters. Morristown, New Jersey
Toll-Free 877.696.8382 **www.us.schindler.com**

Canada Headquarters. Toronto, Ontario
Tel. 416.332.8280 **www.ca.schindler.com**

* 9 &10 story configurations available - limitations apply

Schindler is a member organization of the U.S. Green Building Council.

Schindler has received renewal to ISO 9001 and ISO 14001 certificates.

Schindler prints with vegetable-based ink on paper containing post-consumer waste fiber.

3300 RCR LD CA WF22P1 0723